DIMENSIONAL DATA FOR TRUCK MOUNTED MANURE SPREADERS
MODELS: SXI720 AND SXI865

REVISIONS			
REV.	DESCRIPTION	DATE	APPROVED
A	ADD PTO ADAPTER REQUIREMENT	9/23/2020	SMP

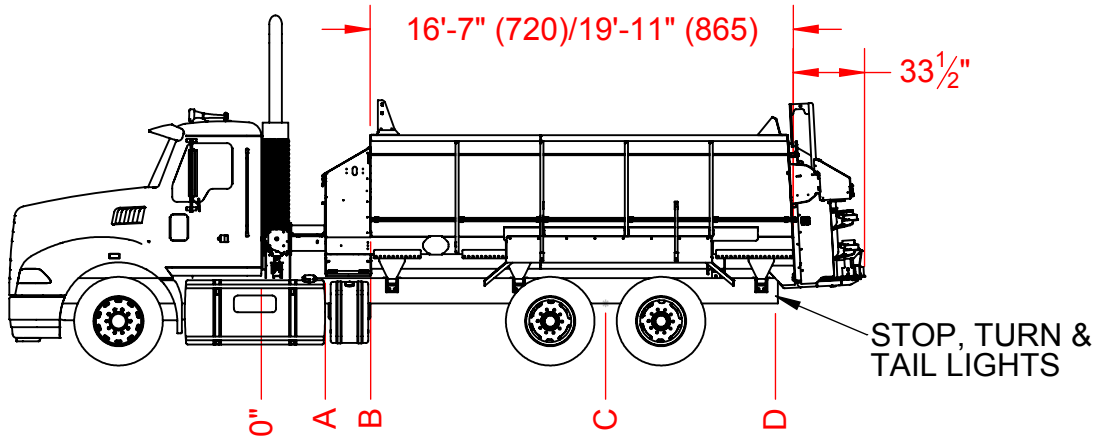

SIZE	A	B	C	D
720	33"	55"	182"	243"
865	33"	55"	202"	283"

SIZE	CU. FT. STRUCK	EMPTY WEIGHT	MOUNT BKT'S REQUIRED	AXLE	GVW	FRONT/REAR AXLES #'S	MIN. ENGINE H.P.	CAB TO AXLE TRUNNION
720	468		3	TANDEM	64,000 #	18/46,000 OR 20/44,000	300	177"-187"
865	562		3	TANDEM	64,000 #	18/46,000 OR 20/44,000	300	197"-207"

TRUCK PTO REQUIREMENTS-(DIRECT DRIVE)

TRUCK PTO-400 FT/LBS

A PTO ADAPTER MUST HAVE BOLT PATTERN AND PILOT TO ACCEPT A 1410 SERIES DRIVELINE, SPICER #3-2-159.

DIRECT DRIVE REQUIREMENTS

GEARBOX DRIVE SYSTEM

100% OF ENGINE SPEED TO REACH 1000 RPM INPUT AT SPREADER.

SELECT TRUCK WITH AXLE, FRAME AND HORSEPOWER CONFIGURATION THAT MATCH CAPABILITIES OF SPREADER. ALWAYS FOLLOW FEDERAL, STATE & LOCAL LAWS FOR LIGHTING, WEIGHT & OPERATION. BE SURE SPREADER IS LOCATED ON TRUCK TO PROVIDE SAFE WEIGHT DISTRIBUTION.

LIGHTING SPECIFICATIONS

HIGHWAY LIGHT PACKAGE RECOMMENDED FOR ON ROAD TRANSPORT

SUPPLY A 7-PIN MALE & FEMALE PLUG OFF OF THE REAR OF THE CAB FOR LIGHT HOOK UP TO IMPLEMENT, LOCATED CENTRALLY BEHIND THE CAB. ORDER FROM MEYER MFG. #56-0005-2 & #56-0014-1.

TAIL LIGHT CONVERTER

DEPENDING ON MAKE AND MODEL OF TRUCK, IT MAY BE NECESSARY TO INSTALL A LIGHT CONVERTER, MEYER MFG. #56-0028. CONVERTER ALLOWS SIGNAL LIGHTS AND BRAKE LIGHTS TO OPERATE ACCORDING TO D.O.T. LIGHTING REGULATIONS.

LIGHTING REQUIREMENTS

TRUCK MUST BE EQUIPPED WITH STOP, TURN & TAIL LIGHTS

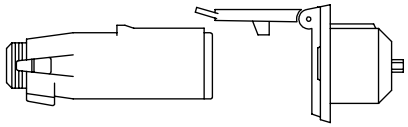

56-0005-2 56-0014-1

FEMALE TRUCK PLUG

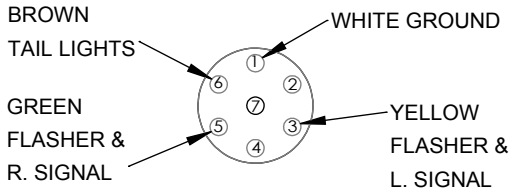

#1-GROUND (WHITE OR RED FROM IMPLEMENT)
#3-FLASHERS & L. SIGNAL (YELLOW FROM IMPLEMENT)
#5-FLASHER & R. SIGNAL (GREEN FROM IMPLEMENT)
#6-CLEARANCE LAMPS (BROWN FROM IMPLEMENT)

MEYER MANUFACTURING WILL NOT BE RESPONSIBLE FOR UNITS THAT ARE NOT SET UP ACCORDING TO THE SPECIFICATIONS ON THIS PAGE. SYSTEM FAILURE COULD OCCUR ALONG WITH POOR PERFORMANCE.

	NAME	DATE	MEYER MFG CORP.
DRAWN	Craig	12/19/2017	
REVISED	Stacey	09/18/2020	MATERIAL

UNLESS OTHERWISE SPECIFIED:
DIMENSIONS ARE IN INCHES
TOLERANCES:
FRACTIONAL ±1/32"
ANGULAR: BEND ±.5°
TWO PLACE DECIMAL ±.020"
THREE PLACE DECIMAL ±.010"

TITLE:
SXI720 & SXI865 TRUCK MOUNT SPECIFICATIONS

PROPRIETARY AND CONFIDENTIAL
THE INFORMATION CONTAINED IN THIS DRAWING IS THE SOLE PROPERTY OF MEYER MFG CORP. ANY REPRODUCTION IN PART OR AS A WHOLE WITHOUT THE WRITTEN PERMISSION OF MEYER MFG CORP. IS PROHIBITED.

SIZE	DWG. NO.	REV
A	SXI-TRUCK-P-SPECS	A

SCALE: 1:90 | WT: 0.00 | SHEET 1 OF 1

5 4 3 2 1